Extended pivot arm heavy duty

Monitor adaption	5” plunge plate	
Colours to choose	decorative parts	RAL 5013 cobalt blue / RAL 7024 graphite grey
	aluminum parts	RAL 9016 traffic white / RAL 9002 grey white
Max. load capacity support arm	18 kg / 39.7 lbs	
Max. load monitor adaptation	18 kg / 39.7 lbs	
Product weight	3 kg / 6.6 lbs	
Part number	A-H33030A-Y.CD	

Fixings

Y | details page 3 and 4

4V

Adapter for vertical wall channel

2F

Fixed rail clamp

3

Vertical rail clamp

3DR
3TX

Dual vertical rail clamp

1
1B
1F
1C
1V

Fixed / universal pole clamp

13

Adapter for Mindray medical supply units

17

Adapter for Amico pendants & headwalls

9

Adapter for Löwenstein Medical anaesthesia machines

4K

Adapter for anaesthesia machines with existing side channel

Extended pivot arm heavy duty

Technical data

SIDE VIEW

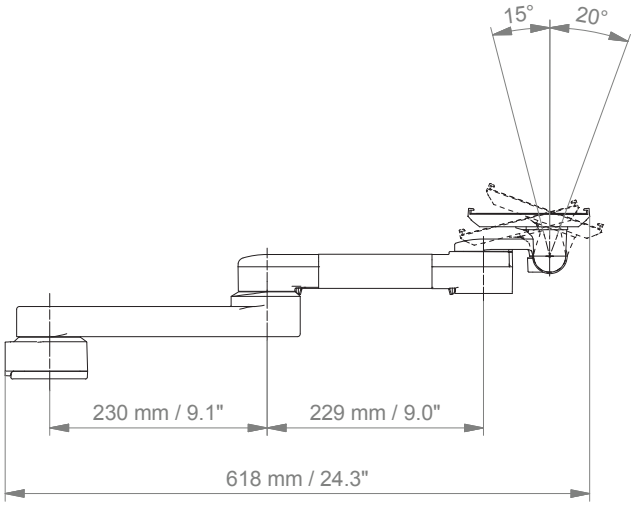

TOP VIEW

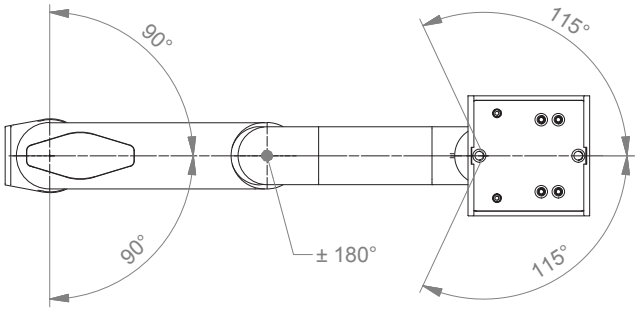

Fixings

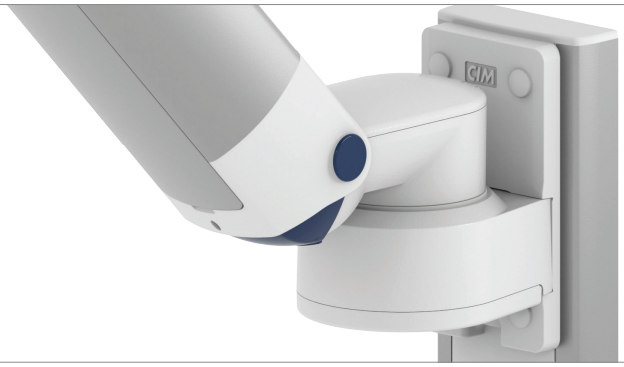

Illustration	Description	Notes	Part no.
	Adapter for vertical wall channel	To mount to CIM wall channel (compatible with GCX channel) For arms with high mounting positions Please order separately: CIM wall channel, see catalogue accessoires	4V 4U
	Fixed rail clamp	To mount to horizontal European rails 10 x 25, 8 x 35, 10 x 30, 10 x 50 mm	2F
	Vertical rail clamp	To mount to vertical European rail 10 x 25 mm	3
	Dual vertical rail clamp	To mount to two parallel vertical European rails 10 x 50 mm Distance between rails 150 mm / 5.9”, e.g. Dräger pendant Distance between rails 225 mm / 8.9”, e.g. Trilux pendant	 3DR 3TX
	Fixed pole clamp	To mount to pole ø 25 mm / 1.0” To mount to pole ø 30 mm / 1.2” To mount to pole ø 35 mm / 1.4” To mount to pole ø 38 mm / 1.5”	1 1B 1F 1C
	Universal pole clamp	V-block to mount to pole ø 23 - 40 mm / 0.9 - 1.6”	1V
	Adapter medical supply units	For Mindray medical supply units	13
	Adapter pendants & headwalls	For Amico pendants & headwalls	17

Fixings for anaesthesia machines

Illustration	Description	Notes	Part no.
	Adapter for Löwenstein Medical anaesthesia machines	Adapter for Leon / Leon plus	9
	Adapter for anaesthesia machines (all suppliers)	H 80 mm / 3.1” With existing side channel	4K
If your anaesthesia machine does not have a side channel already mounted to the machine, please order the following in addition to 4K:			
	Adapter for Dräger 	Dräger Primus / Julian / Cato / Fabius GS / Zeus side channel adapter L 127 mm / 5” side channel adapter L 320 mm / 12.6” side channel adapter L 480 mm / 18.9” side channel adapter L 210 mm / 8.3”	 DR-J01 DR-J02 DR-J03 DR-J06
	Adapter for GE 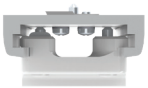	GE Avance / Aespire / Aestiva side channel adapter L 200 mm / 7.9” side channel adapter L 350 mm / 13.8”	 DX-AES-01 DX-AES-02

How to create part numbers

Part numbers can be easily created by following the steps below:
Please replace the letters in green with the part no. code as per your requirements.

1. Components' grounding:

A	=	grounded

2. Choose the arm version required:

224A / 230A	=	support arm pivot
33030A	=	extended pivot arm light duty
H33030A	=	extended pivot arm heavy duty
431A	=	height adjustable arm
73130A	=	extended height adjustable arm
531A	=	high position height adjustable arm
83130A	=	extended high position height adjustable arm

3. Specify where you want to mount the arm and select the fixing (Y):

1V	=	pole ø 23 - 40 mm / 0.9 - 1.6"
1	=	pole ø 25 mm / 1.0"
1B	=	pole ø 30 mm / 1.2"
1F	=	pole ø 35 mm / 1.4"
1C	=	pole ø 38 mm / 1.5"
2F	=	horizontal rails 10 x 25, 8 x 35, 10 x 30, 10 x 50 mm
3	=	vertical rail 10 x 25 mm
3DR	=	dual vertical rails, distance 150 mm/ 5.9"
3TX	=	dual vertical rails, distance 225 mm/ 8.9"
4V	=	vertical wall channel
4U	=	vertical wall channel for arms with high mounting position
13	=	Mindray medical supply units
17	=	Amico pendants & headwalls
9	=	Löwenstein Medical anaestesia machine
4K	=	anaestesia machine with existing channel

How to create part numbers

4. Choose the colour requested for decorative parts (C):

gr	=	RAL 7024 (graphite grey)
bl	=	RAL 5013 (cobalt blue)

5. Choose the colour requested for the aluminium die-cast parts (D):

1	=	RAL 9016 (traffic white)
2	=	RAL 9002 (grey white)

6. Specify the spring depending on the weight of your monitor/ device - only with height adjustable arms (X):

60	=	2 - 5 kg / 4.4 - 11 lbs
95	=	4 - 9 kg / 8.8 - 19.8 lbs
130	=	7.5 - 13 kg / 16.5 - 28.7 lbs
175	=	13 - 16 kg / 28.7 - 35.3 lbs
220	=	16 - 22 kg / 35.3 - 48.5 lbs

Example

01 Grounding		02 Arm version		03 Fixing		04 & 05 Colour		06 Spring tension
A	-	431A	-	Y	.	CD	_	X
A	-	431A	-	4V	.	gr1	_	95

General notes

Monitor Adaptations

The 5” plunge plate is intended to accept bottom-mounted monitors. Please note that a special mounting adapter is required for some monitors. The mounting adapter is mounted to the bottom and slides into the 5” plunge plate. For monitors from **Dräger** and **GE** no special mounting adapters are required. For the monitors from **Mindray**, **Nihon Kohden**, **Spacelabs** and **Philips Sure Signs/ Vital Signs** mounting adapters are necessary to mount the monitors. For **Philips IntelliVue series** please refer to the separate catalogue: Philips Monitoring IntelliVue Series.

Components’ grounding

All arms with integrated cable management are equipped with **component grounding**. No grounding is required for arms with external or semi-integrated cable management with cables not being led through joints.

Load capacity

All **height adjustable arms** have a load capacity of 22 kg / 48.5 lbs. Rear mounted monitor adaptations and horizontally mounted 5“ plunge plates accept a maximum monitor weight of 18 kg / 39.7 lbs. An additional 4 kg / 8.8 lbs may be mounted on a down post underneath the front swivel part. Depending on material and tensile factor all weight indications have a 4-fold and/ or 6-fold safety factor according to IEC 60601-1 standards.

Custom-designed solutions and MRI applications

Please contact us for **custom-designed** solutions.

Product marking

All CIM products are CE marked. As **medical product risk class 1** they are conform with the regulations (EU) 2017/745 (MDR) and IEC 60601-1, 3rd Edition. The current standard IEC 60601-1 for electrical and mechanical safety is the 3rd Edition. Other standards of the IEC 60601 series are not applicable to our products, regardless of their version.

Product highlights

Non-height adjustable arm
Pivot and extended pivot arms offer **full cable integration** and easy cleaning for **infection control** in all critical care areas in the clinical environment. Our **5-years warranty** guarantees reliable, trouble-free and maintenance-free operation. The swivel function at the fixing point as well as the **tilt/ swivel function** of the monitor adaptation offers optimum positioning of your device. The extended pivot arm is a two-part arm with central pivot point between the two arm sections. All bottom-mounted monitors have the safety feature of a **20° tilt stop**.

Height adjustable arm
The height adjustable arm offers **full cable integration**, one-wipe clean surfaces and our **5-year warranty** on the entirety of the product. Vertically and horizontally adjustable, the arm offers optimal positioning of your device. A constant viewing angle when vertically adjusted is guaranteed by a parallel linkage. **Weight-optimized springs counter-balance** the monitor without making any adjustments. All bottom-mounted monitors have the safety feature of a **20° tilt stop**. Individual rotational stops may be integrated in any joint.

To provide the perfect combination of arm and monitor, the CIM articulated height adjustable arm has a simple quarter-turn lock to hold the arm safely in position when removing the monitor. Furthermore the arm is equipped with the unique safety feature of a slow-release gas spring. Should anybody try to remove the monitor before locking the arm in position, the arm will only rise at a slow and even tempo.

SAFETY